SIEMENS

Data sheet 3UG5511-1AR20

Siemens EcoTech

monitoring relay phase sequence monitoring 3x 160-690 V AC, 15-70 Hz 1 changeover contact screw terminal



product brand name	SIRIUS
product designation	Line monitoring relay
design of the product	monitoring of phase sequence
product type designation	3UG5
General technical data	
product function	line monitoring
display version LED	Yes
design of the display	LED
power loss [W] maximum	1.8 W
power loss [V·A] maximum	5.1 V·A
insulation voltage for overvoltage category III according to IEC 60664	
● with degree of pollution 2 rated value	690 V
● with degree of pollution 3 rated value	690 V
degree of pollution	3
type of voltage	
● for monitoring	AC
● of the operating voltage for actuation	AC/DC
surge voltage resistance rated value	6 kV
shock resistance according to IEC 60068-2-27	sinusoidal half-wave 15 g / 11 ms
vibration resistance according to IEC 60068-2-6	10 ... 55 Hz: 0.35 mm
switching behavior	monostable
mechanical service life (operating cycles) typical	10 000 000
electrical endurance (operating cycles) at AC-15 at 230 V typical	100 000
thermal current of the switching element with contacts maximum	5 A
reference code according to IEC 81346-2	K
Substance Prohibitance (day/month/year)	06/01/2023
SVHC substance name	Lead CAS-No. 7439-92-1 Lead monoxide (lead oxide) CAS-No. 1317-36-8 2-methyl-1-(4-methylthiophenyl)-2-morpholinopropan-1-one CAS-No. 71868-10-5 Melamine CAS-No. 108-78-1 6,6'-di-tert-butyl-2,2'-methylenedi-p-cresol CAS-No. 119-47-1
Net Weight	0.137 kg
Product Function	
product function	
● undervoltage detection	No

Subject to change without notice
© Copyright Siemens

● overvoltage detection	No
● phase sequence recognition	Yes
● phase failure detection	No; available but limited, detection is problematic with high levels of regenerative power recovery
● asymmetry detection	No; not adjustable, indirectly by monitoring the voltage limit values
● overcurrent detection 1 phase	No
● overvoltage detection 3 phase	No
● undercurrent detection 1 phase	No
● undervoltage detection 3 phases	No
● voltage window recognition 3 phase	No
● adjustable open/closed-circuit current principle	No
● auto-RESET	Yes
● neutral conductor monitoring adjustable	No
suitability for use safety-related circuits	No
Control circuit/ Control	
type of voltage of the control supply voltage	AC
control supply voltage 1 at AC	
● at 50 Hz	200 ... 690 V
● at 60 Hz	200 ... 690 V
operating range factor control supply voltage rated value at AC at 50 Hz	
● initial value	0.85
● full-scale value	1.1
operating range factor control supply voltage rated value at AC at 60 Hz	
● initial value	0.85
● full-scale value	1.1
Supply voltage	
supply voltage frequency rated value	70 ... 15 Hz
Interfaces	
design of the interface bluetooth	No
Measuring circuit	
measurable voltage 1 at AC	160 ... 760 V
measurable voltage 2 at AC	160 ... 760 V
buffering time in the event of power failure minimum	20 ms
response time maximum	500 ms
Short-circuit protection	
design of the fuse link	
● for short-circuit protection of the NO contacts of the relay outputs required	gL/gG: 6 A or MCB type C: 1 A
● for short circuit protection of the NC contacts of the relay outputs required	gL/gG: 6 A or MCB type C: 1 A
Communication/ Protocol	
protocol is supported IO-Link protocol	No
type of voltage supply via input/output link master	No
Auxiliary circuit	
material of switching contacts	AgSnO2
number of NC contacts delayed switching	0
number of NO contacts delayed switching	0
number of CO contacts	
● for auxiliary contacts	1
● delayed switching	0
operating frequency with 3RT2 contactor maximum	5 000 1/h
contact reliability of auxiliary contacts	one incorrect switching operation of 100 million switching operations (17 V, 5 mA)
contact rating of auxiliary contacts according to UL	R300 / B300
Main circuit	
number of poles for main current circuit	3
ampacity of the output relay at AC-15	
● at 250 V at 50/60 Hz	3 A

© Copyright Siemens

● at 400 V at 50/60 Hz	3 A
ampacity of the output relay at DC-13	
● at 24 V	1 A
● at 110 V	0.2 A
● at 125 V	0 A
● at 230 V	0.1 A
● at 250 V	0 A
operational current at 17 V minimum	5 mA
continuous current of the DIAZED fuse link of the output relay	6 A
Electromagnetic compatibility	
EMC emitted interference according to IEC 60947-1	class A
conducted interference	
● due to burst according to IEC 61000-4-4	2 kV (power ports), 2 kV (signal ports)
● due to conductor-earth surge according to IEC 61000-4-5	2 kV
● due to conductor-conductor surge according to IEC 61000-4-5	1 kV
field-based interference according to IEC 61000-4-3	10 V/m
electrostatic discharge according to IEC 61000-4-2	6 kV contact discharge / 8 kV air discharge
Galvanic isolation	
design of the electrical isolation	galvanic isolation
galvanic isolation	
● between input and output	Yes
● between the voltage supply and other circuits	Yes
Safety related data	
product function suitable for safety function	No
Electrical Safety	
protection class IP on the front according to IEC 60529	IP20
Connections/ Terminals	
product component removable terminal for main circuit	Yes
product component removable terminal for auxiliary and control circuit	Yes
type of electrical connection	screw terminal
design of terminals with cross-head screw	PZ 1
type of connectable conductor cross-sections	
● solid	1x (0.5 ... 4 mm²), 2x (0.5 ... 2.5 mm²)
● finely stranded with core end processing	1x (0.5 ... 4 mm²), 2x (0.5 ... 2.5 mm²)
● for AWG cables solid	1x (20 ... 12), 2x (20 ... 14)
connectable conductor cross-section	
● solid	0.5 ... 4 mm²
● finely stranded with core end processing	0.5 ... 4 mm²
AWG number as coded connectable conductor cross section	
● solid	20 ... 12
● stranded	20 ... 12
tightening torque with screw-type terminals	0.6 ... 0.8 N·m
stripped length	10 mm
Installation/ mounting/ dimensions	
mounting position	any
fastening method	screw and snap-on mounting onto 35 mm DIN rail
height	100 mm
width	22.5 mm
depth	90 mm
required spacing	
● with side-by-side mounting	
— forwards	0 mm
— backwards	0 mm
— upwards	0 mm
— downwards	0 mm
— at the side	0 mm

Subject to change without notice
© Copyright Siemens

● for grounded parts	
— forwards	0 mm
— backwards	0 mm
— upwards	0 mm
— at the side	0 mm
— downwards	0 mm
● for live parts	
— forwards	0 mm
— backwards	0 mm
— upwards	0 mm
— downwards	0 mm
— at the side	0 mm

Ambient conditions	
installation altitude at height above sea level maximum	2 000 m
ambient temperature	
● during operation	-25 ... +60 °C
● during storage	-40 ... +85 °C
● during transport	-40 ... +85 °C
relative humidity during operation maximum	70 %

Approvals Certificates	
Environmental Product Declaration	
● global warming potential [CO2 eq] / during manufacturing	5.65 kg
● global warming potential [CO2 eq] / during sales	0.0387 kg
● global warming potential [CO2 eq] / during operation	12.3 kg
● global warming potential [CO2 eq] / after end of life	-0.0297 kg
● global warming potential [CO2 eq] / total	18 kg

Environment	**General Product Approval**
Environmental Confirmations	Confirmation

General Product Approval	**EMV**	**Test Certificates**	**Maritime application**	**other**
		Type Test Certificates/Test Report		Confirmation

Further information
Information on the packaging https://support.industry.siemens.com/cs/ww/en/view/109813875 **Information for data generation and storage** https://support.industry.siemens.com/cs/ww/en/view/109995012 **Information- and Downloadcenter (Catalogs, Brochures,…)** https://www.siemens.com/ic10 **Industry Mall (Online ordering system)** https://mall.industry.siemens.com/mall/en/en/Catalog/product?mlfb=3UG5511-1AR20 **Cax online generator** https://support.automation.siemens.com/WW/CAXorder/default.aspx?lang=en&mlfb=3UG5511-1AR20 **Service&Support (Manuals, Certificates, Characteristics, FAQs,...)** https://support.industry.siemens.com/cs/ww/en/ps/3UG5511-1AR20 **Image database (product images, 2D dimension drawings, 3D models, device circuit diagrams, EPLAN macros, ...)** https://www.automation.siemens.com/bilddb/cax_de.aspx?mlfb=3UG5511-1AR20&lang=en

Subject to change without notice
© Copyright Siemens

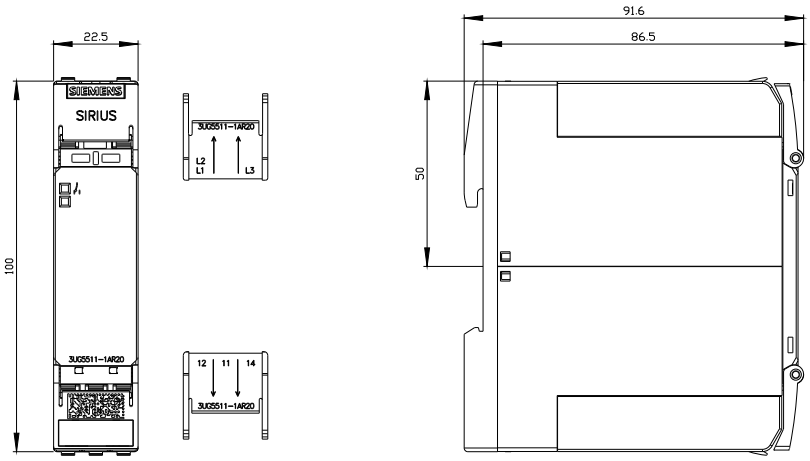

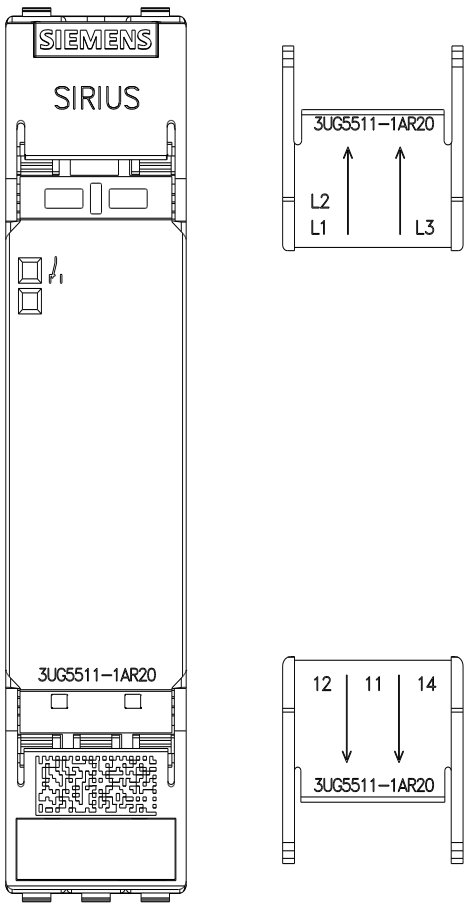

Subject to change without notice
© Copyright Siemens

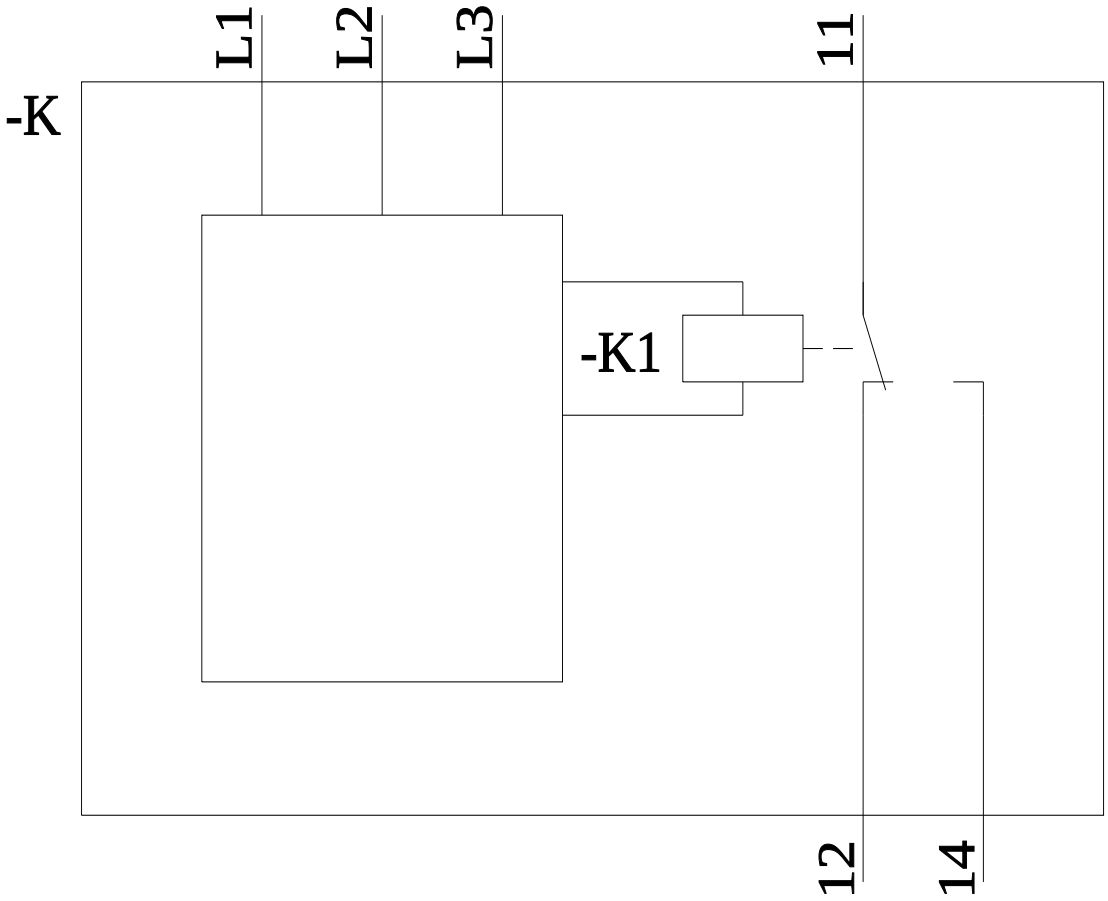

last modified: 8/29/2026

Subject to change without notice
© Copyright Siemens