SIEMENS

Data sheet 3TG1010-0AG2



Figure similar

power relay, AC-3, 8.4 A, 4 kW / 400 V, 3-pole, 110 V AC, 45-450 Hz, auxiliary contacts: 1 NO, screw terminal

consumed active power	4 W
reference code according to IEC 81346-2	K
Substance Prohibitance (day/month/year)	07/01/2006
Net Weight	148.5 g
ambient temperature during operation	-25 ... +55 °C
number of poles	4
number of NO contacts for main contacts	3
number of NC contacts for main contacts	0
type of voltage	AC
operational current	
● at AC-1 at 400 V rated value	20 A
● at AC-3 at 400 V rated value	8.4 A
● at AC-3e at 400 V rated value	6.4 A
operating power	
● at AC-3 at 400 V rated value	4 kW
● at AC-3e at 400 V rated value	3 kW
control supply voltage at AC	
● at 50 Hz rated value	110 V
● at 60 Hz rated value	110 V
supply voltage frequency for auxiliary and control circuit rated value	45 ... 450 Hz
number of NC contacts for auxiliary contacts	0
number of NO contacts for auxiliary contacts	1
number of CO contacts for auxiliary contacts	0
fastening method side-by-side mounting	Yes
fastening method	screw and snap-on mounting onto 35 mm DIN rail
height	62 mm
width	36 mm
depth	60 mm
type of electrical connection	
● for main current circuit	screw-type terminals
● for auxiliary and control circuit	screw-type terminals
Safety related data	
product function	
● **mirror contact according to IEC 60947-4-1**	No
● **suitable for safety function**	Yes
service life maximum	20 a
proportion of dangerous failures	

Subject to change without notice
© Copyright Siemens

• with low demand rate according to SN 31920	40 %
• with high demand rate according to SN 31920	73 %
B10 value with high demand rate according to SN 31920	400 000
failure rate [FIT] with low demand rate according to SN 31920	100 1/s
ISO 13849	
device type according to ISO 13849-1	3
overdimensioning according to ISO 13849-2 necessary	Yes
IEC 61508	
safety device type according to IEC 61508-2	Type A
Electrical Safety	
protection class IP on the front according to IEC 60529	IP00

Approvals Certificates

Environment	General Product Approval				
Environmental Confirmations					

Test Certificates		other			
Special Test Certificate	Type Test Certificates/Test Report	Confirmation	Confirmation	Miscellaneous	

Further information

Information on the packaging
https://support.industry.siemens.com/cs/ww/en/view/109813875
Information for data generation and storage
https://support.industry.siemens.com/cs/ww/en/view/109995012
Information- and Downloadcenter (Catalogs, Brochures,…)
https://www.siemens.com/ic10
Industry Mall (Online ordering system)
https://mall.industry.siemens.com/mall/en/en/Catalog/product?mlfb=3TG1010-0AG2
Service&Support (Manuals, Certificates, Characteristics, FAQs,...)
https://support.industry.siemens.com/cs/ww/en/ps/3TG1010-0AG2
Image database (product images, 2D dimension drawings, 3D models, device circuit diagrams, EPLAN macros, ...)
https://www.automation.siemens.com/bilddb/cax_de.aspx?mlfb=3TG1010-0AG2&lang=en
Cax online generator
https://support.automation.siemens.com/WW/CAXorder/default.aspx?lang=en&mlfb=3TG1010-0AG2
Kennlinien
https://curves.simaris.siemens.com/curves/3TG1010-0AG2

Subject to change without notice
© Copyright Siemens

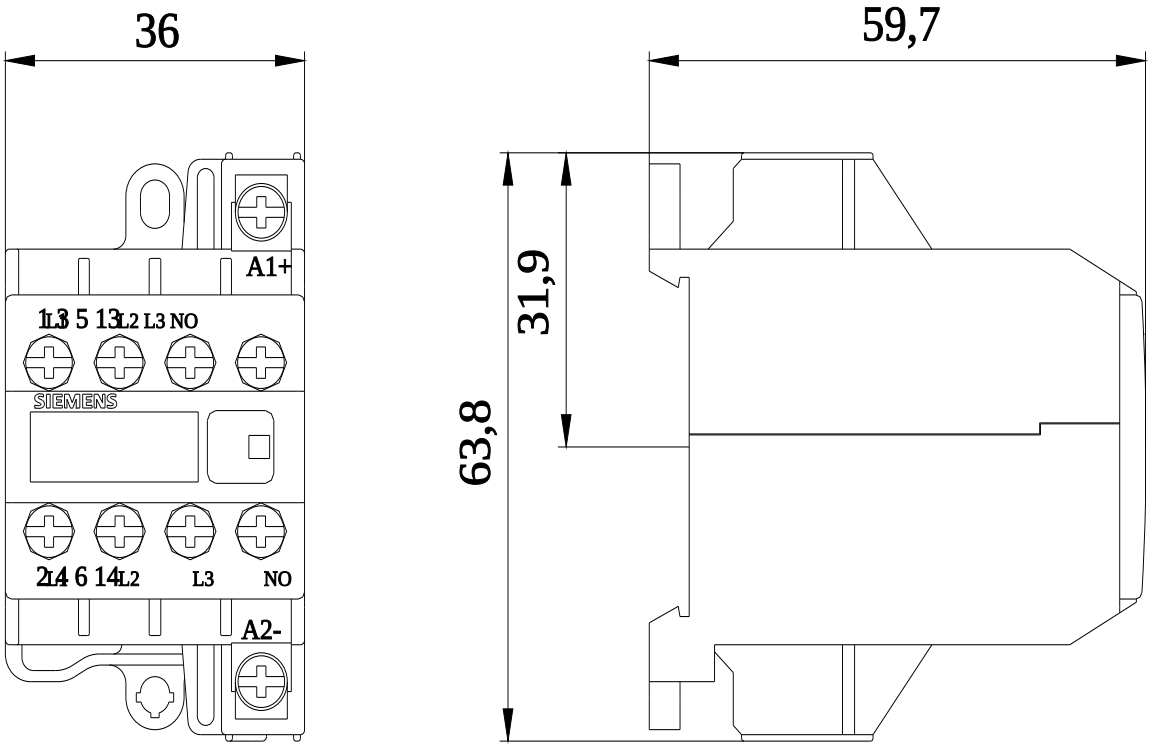

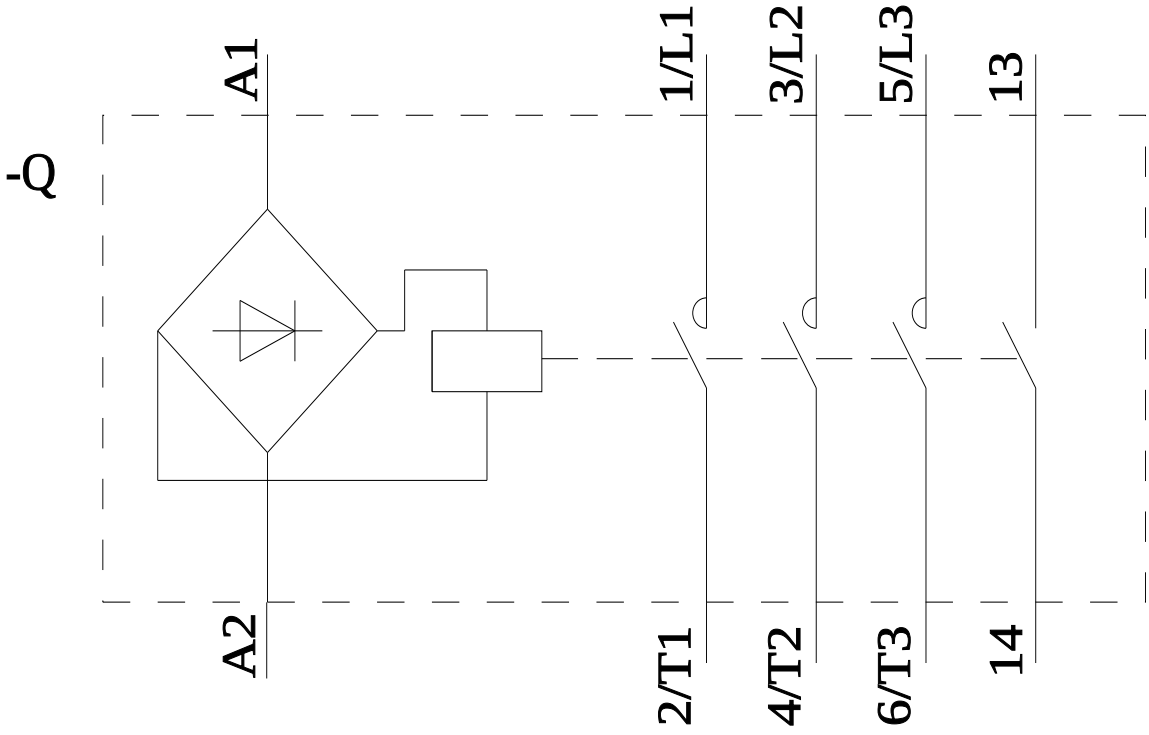

last modified: 4/9/2026

Subject to change without notice
© Copyright Siemens

Subject to change without notice
© Copyright Siemens