SIEMENS

Data sheet 3SK2112-2AA10



SIRIUS safety relay basic unit 3SK2 series 10 F-DI, 2 F-DQ, 1 DQ, 24 V DC Can be parameterized via SIRIUS Safety ES 22.5 mm overall width spring-loaded terminal (push-in) up to SIL 3 (IEC 62061) up to performance level e (ISO 13849-1) output expansions 3SK1, coupling relay 3RQ1 and fail-safe motor starters 3RM1 via device connector connectable

product brand name	SIRIUS
product category	Safety relay
product designation	Base-Unit
design of the product	10 F-DI, 2 F-DQ, 1 DQ
suitability for use for monitoring of optoelectronic protective devices according to IEC 61496-1	Yes
suitability for use	
● monitoring of floating sensors	Yes
● monitoring of non-floating sensors	Yes
● position switch monitoring	Yes
● EMERGENCY-OFF circuit monitoring	Yes
● valve monitoring	Yes
● opto-electronic protection device monitoring	Yes
● magnetically operated switch monitoring	Yes
● proximity switch monitoring	Yes
● safety-related circuits	Yes
General technical data	
product function	
● EMERGENCY STOP function	Yes
● protective door monitoring	Yes
● protective door monitoring with tumbler	Yes
● muting, 2 sensor-parallel	Yes
● muting, 4 sensor-parallel	Yes
● muting, 4 sensor-sequential	Yes
● monitoring parameterizable	Yes
● evaluation: electro-sensitive protective equipment	Yes
● evaluation: selector switch	Yes
● pressure-sensitive mat monitoring	Yes
● evaluation: two-hand operator panel	Yes
● evaluation: enabling switch	Yes
● monitored start-up	Yes
● two-hand control according to EN 574	Yes
configuration software required	Yes; Safety ES V1.0 and higher
number of function blocks typical	50
insulation voltage rated value	50 V
degree of pollution	3
surge voltage resistance rated value	800 V
protection class IP	
● of the enclosure	IP20

Subject to change without notice
© Copyright Siemens

● of the terminal	IP20
shock resistance	15 g / 11 ms
vibration resistance according to IEC 60068-2-6	5 ... 500 Hz: 0.75 mm
operating frequency maximum	2 000 1/h
reference code according to IEC 81346-2	F
Substance Prohibitance (day/month/year)	05/28/2009
SVHC substance name	Lead CAS-No. 7439-92-1 Lead monoxide (lead oxide) CAS-No. 1317-36-8 2-methyl-1-(4-methylthiophenyl)-2-morpholinopropan-1-one CAS-No. 71868-10-5 Melamine CAS-No. 108-78-1
Net Weight	0.171 kg
product function suitable for AS-i Power24V	No
product function diagnostics with CTT2 device	No
Ambient conditions	
installation altitude at height above sea level maximum	4 000 m
ambient temperature	
● during operation	-25 ... +60 °C
● during storage	-40 ... +80 °C
● during transport	-40 ... +80 °C
relative humidity during operation	10 ... 95 %
air pressure according to SN 31205	90 ... 106 kPa
Electromagnetic compatibility	
EMC emitted interference according to IEC 60947-1	class A
conducted interference	
● due to burst according to IEC 61000-4-4	2 kV (power ports) / 1 kV (signal ports)
field-based interference according to IEC 61000-4-3	10 V/m
electrostatic discharge according to IEC 61000-4-2	4 kV contact discharge / 8 kV air discharge
Safety related data	
test wear-related service life necessary	No
diagnostics test interval by internal test function maximum	1 000 s
stop category according to IEC 60204-1	0 / 1
IEC 62061	
SIL Claim Limit (subsystem) according to EN 62061	3
Safety Integrity Level (SIL)	
● **according to IEC 62061**	SIL 3
● at single-channel evaluation according to IEC 62061	1
● at 2-channel evaluation according to IEC 62061	3
PFHD with high demand rate	
● according to IEC 62061	1E-8 1/h
ISO 13849	
performance level (PL) according to EN ISO 13849-1	e
category according to EN ISO 13849-1	4
performance level (PL)	
● **according to ISO 13849-1**	PL e
● at single-channel evaluation according to ISO 13849-1	c
● at 2-channel evaluation according to ISO 13849-1	e
category	
● **according to ISO 13849-1**	4
● at 2-channel evaluation according to ISO 13849-1	4
device type according to ISO 13849-1	1
overdimensioning according to ISO 13849-2 necessary	No
IEC 61508	
Safety Integrity Level (SIL)	
● according to IEC 61508	3
● at single-channel evaluation according to IEC 61508	1
● at 2-channel evaluation according to IEC 61508	3
PFHD with high demand rate according to IEC 61508	1E-8 1/h
PFDavg with low demand rate according to IEC 61508	1.5E-5
Safe failure fraction (SFF)	99 %

Subject to change without notice
© Copyright Siemens

hardware fault tolerance	
● according to IEC 61508	1
● at single-channel evaluation according to IEC 61508	0
● at 2-channel evaluation according to IEC 61508	1
T1 value	
● of service life according to IEC 61508	20 a
● for proof test interval or service life according to IEC 61508	20 a
Electrical Safety	
touch protection against electrical shock	finger-safe
Inputs/ Outputs	
product function	
● parameterizable inputs	Yes
● parameterizable outputs	Yes
● at the digital outputs short-circuit protection	Yes
number of inputs	
● safety-related	10
● non-safety-related	0
input delay time	0 ... 150 ms
type of digital inputs according to IEC 60947-1	Type 1
ingress aquisition time at digital input maximum	60 ms
input delay time at digital input maximum	150 ms
input voltage at digital input at DC rated value	24 V
input current at digital input	
● for signal <1> typical	2.6 mA
number of outputs	
● safety-related 2-channel	2
● for testing contact-based sensors	2
number of outputs as contact-affected switching element safety-related	
● 1-channel	0
● 2-channel	0
number of outputs as contact-less semiconductor switching element	
● safety-related 2-channel	2
● non-safety-related	1
design of the contactless switching element safety-related	P potential
recovery time of the safe outputs	0 ms
readback time maximum	400 ms
light test period	3 ms
dark period of the common drivers	3 ms
switching capacity current of semiconductor outputs at DC-13 at 24 V	4 A
residual current	
● maximum	0.1 mA
● at digital output with signal <0> maximum	0.1 mA
total current maximum	6.5 A
voltage drop maximum	0.5 V
wire length of the signal cable	
● to the inputs	
— shielded maximum	1 000 m
— unshielded maximum	600 m
● to the outputs	
— shielded maximum	1 000 m
— unshielded maximum	600 m
Communication/ Protocol	
protocol optional is supported	
● PROFIBUS DP protocol	Yes; when using the DP interface module; 64 bit cyclical data
● PROFINET IO protocol	Yes; when using the PN interface module; 64-bit cyclic data
protocol is supported AS-Interface protocol	No

Subject to change without notice
© Copyright Siemens

Control circuit/ Control	
type of voltage	DC
control supply voltage rated value	24 V
operating range factor control supply voltage rated value at DC	
● initial value	0.85
● full-scale value	1.2
inrush current peak	
● at 24 V	10 A
duration of inrush current peak	
● at 24 V	1 ms
operating power rated value	2.5 W
Installation/ mounting/ dimensions	
mounting position	any
fastening method	Snap-mounted to DIN rail or screw-mounted with additional push-in lug
height	100 mm
width	22.5 mm
depth	124.5 mm
Connections/ Terminals	
product function removable terminal	Yes
type of electrical connection	spring-loaded terminal (push-in)
type of connectable conductor cross-sections	
● solid	1x (0.5 ... 1.5 mm²), 2x (0.5 ... 1.5 mm²)
● finely stranded with core end processing	1x (0.5 ... 1.0 mm²), 2x (0.5 ... 1.0 mm²)
● for AWG cables solid	1x (20 ... 16), 2x (20 ... 16)
● for AWG cables stranded	1x (20 ... 16), 2x (20 ... 16)
connectable conductor cross-section finely stranded with core end processing	0.5 ... 1 mm²
AWG number as coded connectable conductor cross section	
● solid	20 ... 16
● stranded	20 ... 16

Approvals Certificates

Environment	General Product Approval				EMV
Environmental Confirmations	cULus	EAC	CE EG-Konf.	UKCA	KC

EMV	Functional Saftey	Test Certificates	other	
RCM	Type Examination Certificate	Type Test Certificates/Test Report	Confirmation	产品合格 QC PASS

Further information

Information on the packaging
https://support.industry.siemens.com/cs/ww/en/view/109813875
Information for data generation and storage
https://support.industry.siemens.com/cs/ww/en/view/109995012
Information- and Downloadcenter (Catalogs, Brochures,…)
https://www.siemens.com/ic10
Industry Mall (Online ordering system)
https://mall.industry.siemens.com/mall/en/en/Catalog/product?mlfb=3SK2112-2AA10
Cax online generator
https://support.automation.siemens.com/WW/CAXorder/default.aspx?lang=en&mlfb=3SK2112-2AA10
Service&Support (Manuals, Certificates, Characteristics, FAQs,...)
https://support.industry.siemens.com/cs/ww/en/ps/3SK2112-2AA10
Image database (product images, 2D dimension drawings, 3D models, device circuit diagrams, EPLAN macros, ...)
https://www.automation.siemens.com/bilddb/cax_de.aspx?mlfb=3SK2112-2AA10&lang=en

Subject to change without notice
© Copyright Siemens

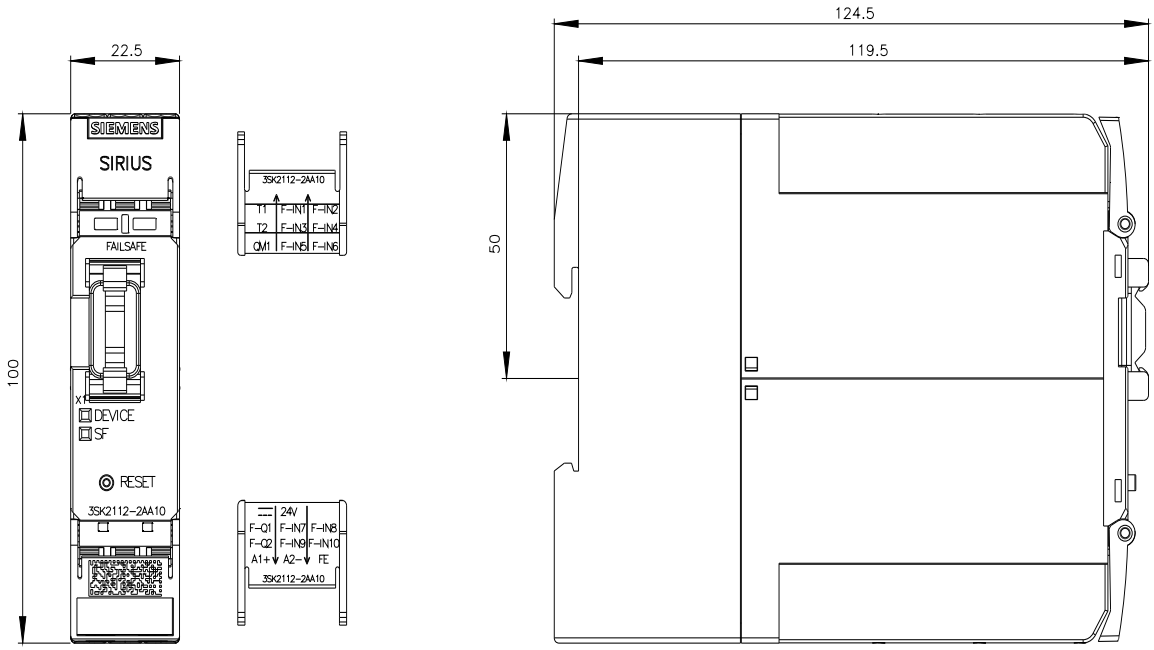

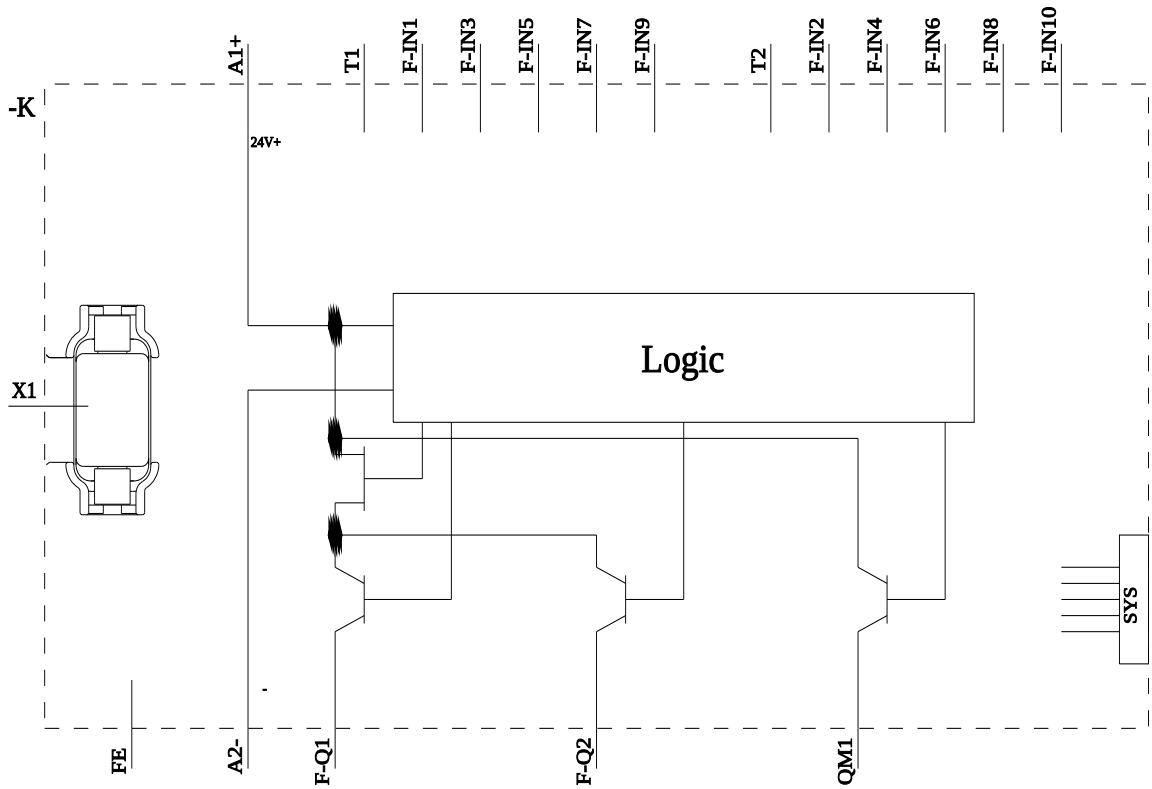

last modified: 4/4/2026

Subject to change without notice
© Copyright Siemens

Subject to change without notice
© Copyright Siemens