SIEMENS

Data sheet 3SK1122-2CB42



SIRIUS safety relay Basic unit Advanced series with time delay 0.5-30 s electronic enabling circuits 2 NO instantaneous 2 NO delayed Us = 24 V DC Spring-type terminal (push-in)

product brand name	SIRIUS
product category	Safety relays
product designation	safety relays
design of the product	Solid-state enabling circuits
product type designation	3SK1
product line	Advanced basic unit
Product Function	
product function parameterizable	sensor floating / sensor non-floating, monitored start-up / automatic start, 1-channel / 2-channel sensor connection, cross-circuit detection, startup testing, antivalent sensors, 2-hand switches, time delay
product function	
● automatic start	Yes
● light barrier monitoring	Yes
● protective door monitoring	Yes
● magnetically operated switch monitoring NC-NO	Yes
● magnetically operated switch monitoring NC-NC	Yes
● laser scanner monitoring	Yes
● light array monitoring	Yes
● EMERGENCY OFF function	Yes
● monitored start-up	Yes
● pressure-sensitive mat monitoring	No
product feature cross-circuit-proof	Yes
suitability for interaction press control	Yes
suitability for operation device connector 3ZY12	Yes
suitability for use	
● monitoring of floating sensors	Yes
● monitoring of non-floating sensors	Yes
● position switch monitoring	Yes
● EMERGENCY-OFF circuit monitoring	Yes
● opto-electronic protection device monitoring	Yes
● magnetically operated switch monitoring	Yes
● safety-related circuits	Yes
General technical data	
certificate of suitability UL approval	Yes
product feature protective coating on printed-circuit board	No
power loss [W] maximum	2 W
insulation voltage rated value	50 V
degree of pollution	3
overvoltage category	3
surge voltage resistance rated value	800 V

Subject to change without notice
© Copyright Siemens

protection class IP of the enclosure	IP20
shock resistance	10 g / 11 ms
vibration resistance according to IEC 60068-2-6	5 ... 500 Hz: 0.75 mm
operating frequency maximum	2 000 1/h
reference code according to IEC 81346-2	F
Substance Prohibitance (day/month/year)	11/05/2012
SVHC substance name	Lead CAS-No. 7439-92-1 Lead monoxide (lead oxide) CAS-No. 1317-36-8 2-methyl-1-(4-methylthiophenyl)-2-morpholinopropan-1-one CAS-No. 71868-10-5 Melamine CAS-No. 108-78-1 6,6'-di-tert-butyl-2,2'-methylenedi-p-cresol CAS-No. 119-47-1
Net Weight	0.158 kg
Ambient conditions	
installation altitude at height above sea level maximum	4 000 m
● note	Derating, see Product Notification 109792701
ambient temperature	
● during operation	-25 ... +60 °C
● during storage	-40 ... +80 °C
relative humidity during operation	10 ... 95 %
air pressure according to SN 31205	900 ... 1 060 hPa
Electromagnetic compatibility	
installation environment regarding EMC	This product is suitable for Class A environments only. In household environments, this device can cause unwanted radio interference. The user is required to implement appropriate measures in this case.
EMC emitted interference	IEC 60947-5-1, Class A
Safety related data	
product function suitable for safety function	Yes
safe state	Safety outputs switched off
test wear-related service life necessary	No
diagnostics test interval by internal test function maximum	600 s
stop category according to IEC 60204-1	0 / 1
IEC 62061	
SIL Claim Limit (subsystem) according to EN 62061	3
Safety Integrity Level (SIL)	
● **according to IEC 62061**	SIL 3
● at single-channel evaluation according to IEC 62061	1
● at 2-channel evaluation according to IEC 62061	3
PFHD with high demand rate according to IEC 62061	0,0000000015
ISO 13849	
category according to EN ISO 13849-1	4
performance level (PL)	
● **according to ISO 13849-1**	PL e
● at single-channel evaluation according to ISO 13849-1	c
● at 2-channel evaluation according to ISO 13849-1	e
● for delayed release circuit according to ISO 13849-1	e
category	
● **according to ISO 13849-1**	4
● at 2-channel evaluation according to ISO 13849-1	4
overdimensioning according to ISO 13849-2 necessary	No
IEC 61508	
Safety Integrity Level (SIL)	
● according to IEC 61508	3
● for delayed release circuit according to IEC 61508	SIL3
● at single-channel evaluation according to IEC 61508	1
● at 2-channel evaluation according to IEC 61508	3
safety device type according to IEC 61508-2	Type B
PFHD with high demand rate according to IEC 61508	0.0000000015
PFDavg with low demand rate according to IEC 61508	0.000007
Safe failure fraction (SFF)	99 %
hardware fault tolerance	

Subject to change without notice
© Copyright Siemens

● according to IEC 61508	1
● at single-channel evaluation according to IEC 61508	0
● at 2-channel evaluation according to IEC 61508	1
T1 value	
● of service life according to IEC 61508	20 a
● for proof test interval or service life according to IEC 61508	20 a
Electrical Safety	
touch protection against electrical shock	finger-safe
Short-circuit protection	
design of the fuse link	
● for short-circuit protection of the NO contacts of the relay outputs required	not required
Inputs	
design of input	
● cascading input/functional switching	Yes
● feedback input	Yes
● start input	Yes
pulse duration of the sensor input minimum	60 ms
number of sensor inputs 1-channel or 2-channel	1
Outputs	
number of outputs as contact-less semiconductor switching element	
● for signaling function	
— instantaneous contact	0
● safety-related	
— delayed switching	2
— instantaneous contact	2
switching capacity current of semiconductor outputs at DC-13 at 24 V	2 A
Times	
make time with automatic start	
● at DC maximum	85 ms
make time with automatic start after power failure	
● typical	6 500 ms
● maximum	6 500 ms
make time with monitored start	
● maximum	85 ms
backslide delay time after opening of the safety circuits typical	40 ms
adjustable OFF-delay time after opening of the safety circuits	0.5 ... 30 s
recovery time after opening of the safety circuits typical	30 ms
recovery time after power failure typical	6.5 s
pulse duration	
● of the ON pushbutton input minimum	0.15 s
Control circuit/ Control	
type of voltage of the control supply voltage	DC
control supply voltage at DC rated value	24 V
operating range factor control supply voltage rated value of magnet coil at DC	
● initial value	0.8
● full-scale value	1.2
Installation/ mounting/ dimensions	
mounting position	any
fastening method	screw and snap-on mounting
height	100 mm
width	22.5 mm
depth	121.6 mm
required spacing	
● for grounded parts at the side	5 mm

© Copyright Siemens

Connections/ Terminals	
type of electrical connection	spring-loaded terminal (push-in)
wire length	
● with Cu 1.5 mm² and 150 nF/km per sensor circuit maximum	4 000 m
type of connectable conductor cross-sections	
● solid	1x (0.5 ... 1.5 mm²), 2x (0.5 ... 1.5 mm²)
● finely stranded with core end processing	1x (0.5 ... 1.0 mm²), 2x (0.5 ... 1.0 mm²)
● finely stranded without core end processing	1x (0.5 ... 1.5 mm²), 2x (0.5 ... 1.5 mm²)
● for AWG cables solid	1x (20 ... 16), 2x (20 ... 16)
● for AWG cables stranded	1x (20 ... 16), 2x (20 ... 16)
type of electrical connection plug-in socket	No

Approvals Certificates

Environment	General Product Approval				
Environmental Confirmations	EPD	CCC	cULus	EAC	CE EG-Konf.

General Product Approval	EMV		Functional Saftey	Test Certificates	Maritime application
UKCA	KC	RCM	Type Examination Certificate	Type Test Certificates/Test Report	DNV

Maritime application		other		Railway
Lloyd's Register LRS	RINA	Confirmation	产品合格 QC PASS	Confirmation

Further information

Information on the packaging
https://support.industry.siemens.com/cs/ww/en/view/109813875
Information for data generation and storage
https://support.industry.siemens.com/cs/ww/en/view/109995012
Information- and Downloadcenter (Catalogs, Brochures,…)
https://www.siemens.com/ic10
Industry Mall (Online ordering system)
https://mall.industry.siemens.com/mall/en/en/Catalog/product?mlfb=3SK1122-2CB42
Cax online generator
https://support.automation.siemens.com/WW/CAXorder/default.aspx?lang=en&mlfb=3SK1122-2CB42
Service&Support (Manuals, Certificates, Characteristics, FAQs,...)
https://support.industry.siemens.com/cs/ww/en/ps/3SK1122-2CB42
Image database (product images, 2D dimension drawings, 3D models, device circuit diagrams, EPLAN macros, ...)
https://www.automation.siemens.com/bilddb/cax_de.aspx?mlfb=3SK1122-2CB42&lang=en

© Copyright Siemens

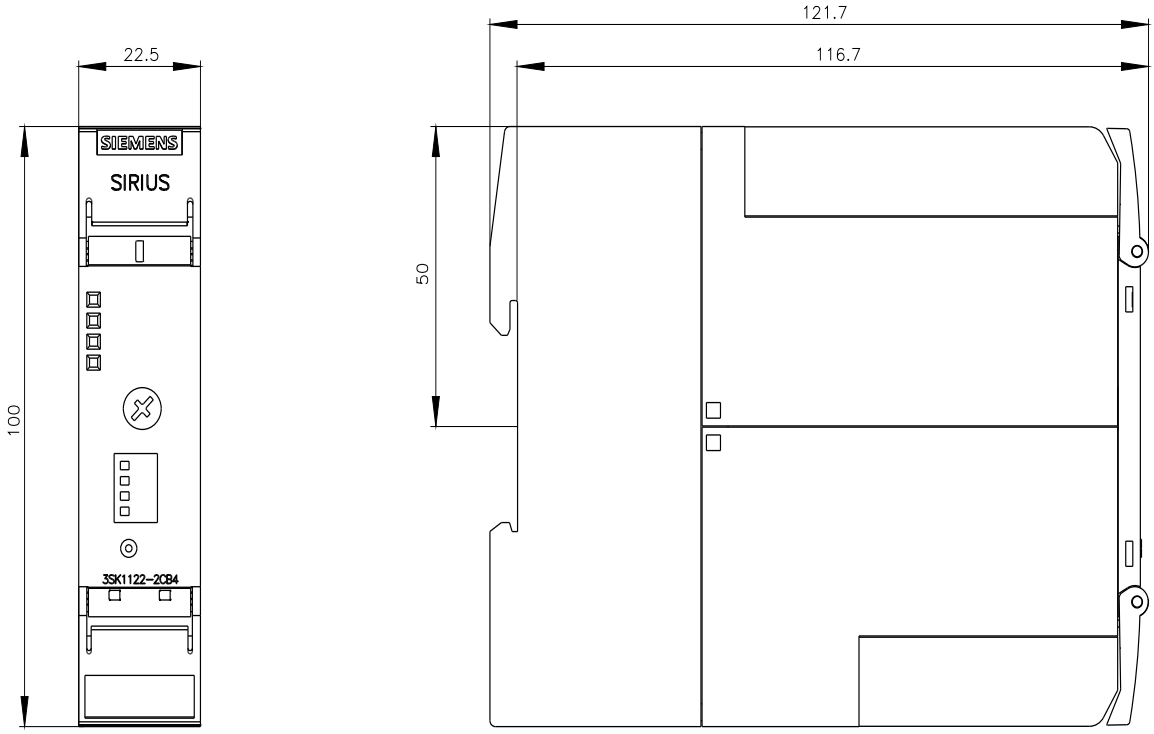

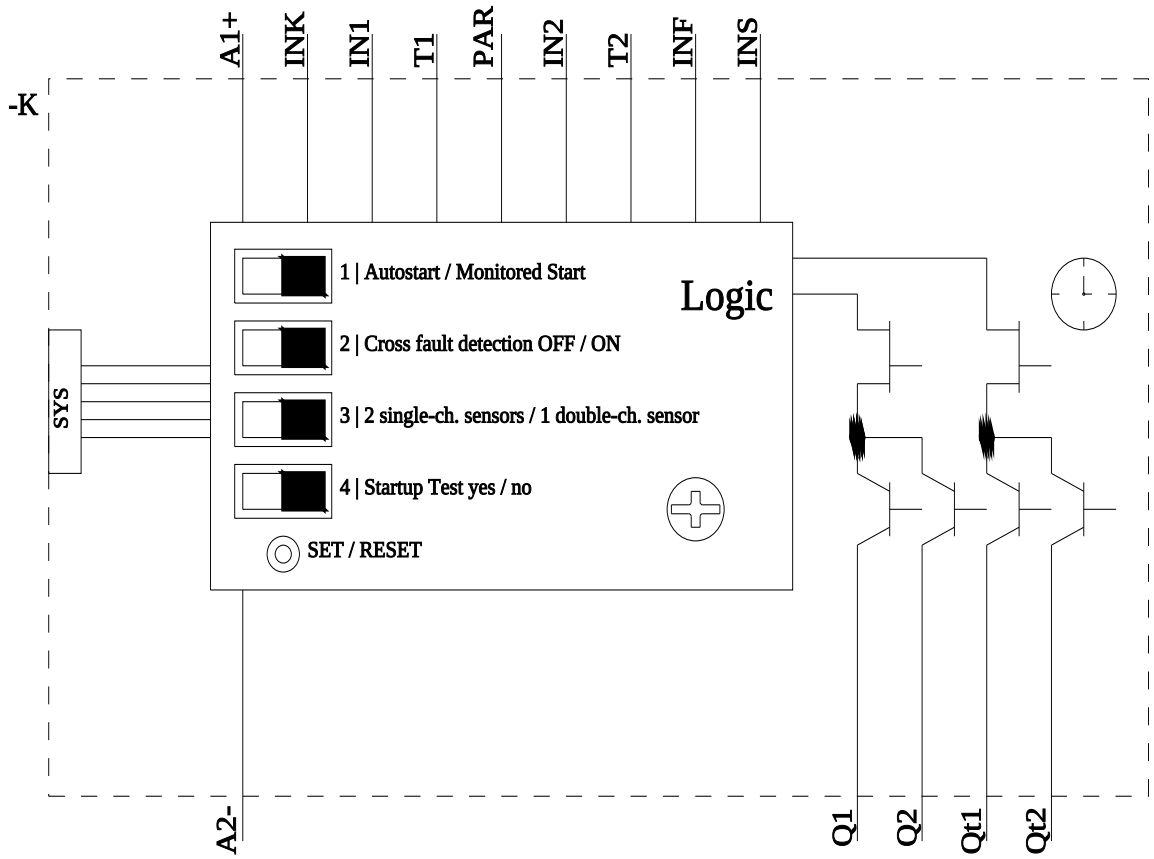

Subject to change without notice
© Copyright Siemens

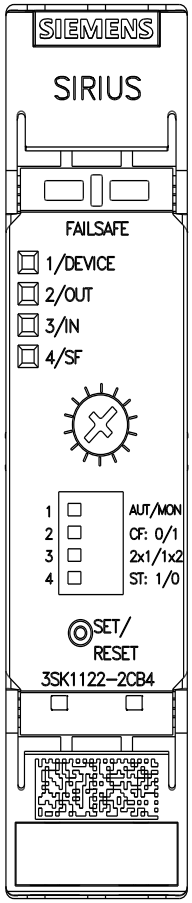

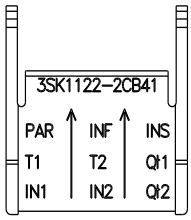

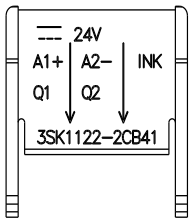

last modified: 8/28/2026

Subject to change without notice
© Copyright Siemens